Conversion of waste heat, acquired from aerial vehicles and other equipment, via specially designed thermoelectric devices, into electricity

İnji Aliyeva

DOI: 10.29322/IJSRP.14.07.2024.p15102

Paper Received Date: 15th May 2024
Paper Acceptance Date: 24th June 2024
Paper Publication Date: 6th July 2024

Abstract- Every year, 16.9 million flights take place from all over the world. During the flight, each of these planes produces a huge amount of waste heat due to using fossil energy. This waste heat is produced as a compulsory outcome of energy- using machines and engines. As we all know, fossil fuels account for 70% of the energy produced worldwide, and this production generates a significant amount of waste energy. This means that 35–45% of the energy in fossil fuels results in electric power, and the rest becomes heat. In order to improve aircraft efficiency, my goal is to convert the waste energy released by an aircraft's engine into electricity. As a result of the significant temperature differential caused in the upper layers of the atmosphere,I expect to generate energy by using specifically built thermoelectric devices in aircraft engines to achieve this goal. The surface of this thermal generator is exposed to waste heat emanating from the engine, and the other surface is exposed to cold air. I conducted some experiments to support my hypothesis, and the findings were positive. The thermoelectric device produced electricity when dry ice at -40 degrees Celsius was applied to one side and a flame of alcohol lamp at 300–350 degrees Celsius to the other. After conducting my experiment,I came to the conclusion that I can produce energy via thermoelectric generators from energy-using machines and engines. Knowing all this information, I can say that my project can be the solution for increasing the efficiency of aircraft and it can be something big in the future.

Index Terms- Aircraft Efficiency,Thermoelectric Devices,Waste Heat Conversion,Waste Heat Recovery

I. Introduction

What is waste heat?

Waste heat is the unused heat given to the surrounding environment by a heat engine in a thermodynamic process in which it converts heat to useful work. The second law of thermodynamics states that waste heat must be produced when converting a temperature difference into mechanical energy. Waste heat is inevitable or any heat engine and the amount it produces compared to the amount 4 of input heat are factors that make up its thermal efficiency. Since waste heat is a necessary product of heat engines, efficiencies of power plants are limited and therefore must burn more fuels in order to achieve their desired energy output. Bethel Afework 2018) Such disposed energy is a great waste. Provided that around 70% of the energy is acquired through fossil energy sources, the scale of such waste is especially obvious (see Figure 1). The average efficiencies of power generation are 35% for coal, 45% for natural gas and 38% for oil-fired power generation. What this means is that 35-45% of the energy in fossil fuel results in electric power, the rest becomes heat.(Zeiss 2010)

(see Figure 2)

Share of electricity production from fossil fuels, 2021

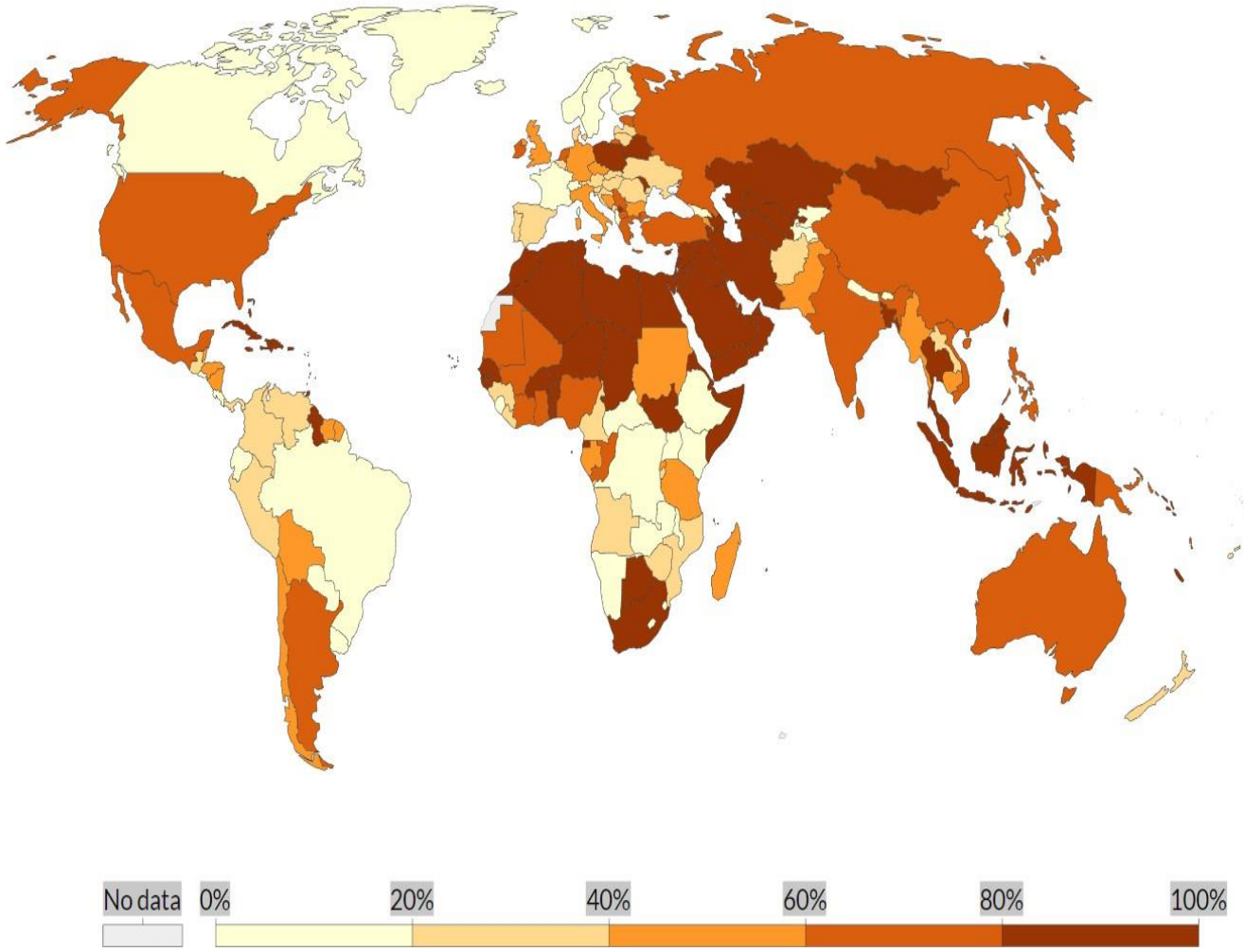

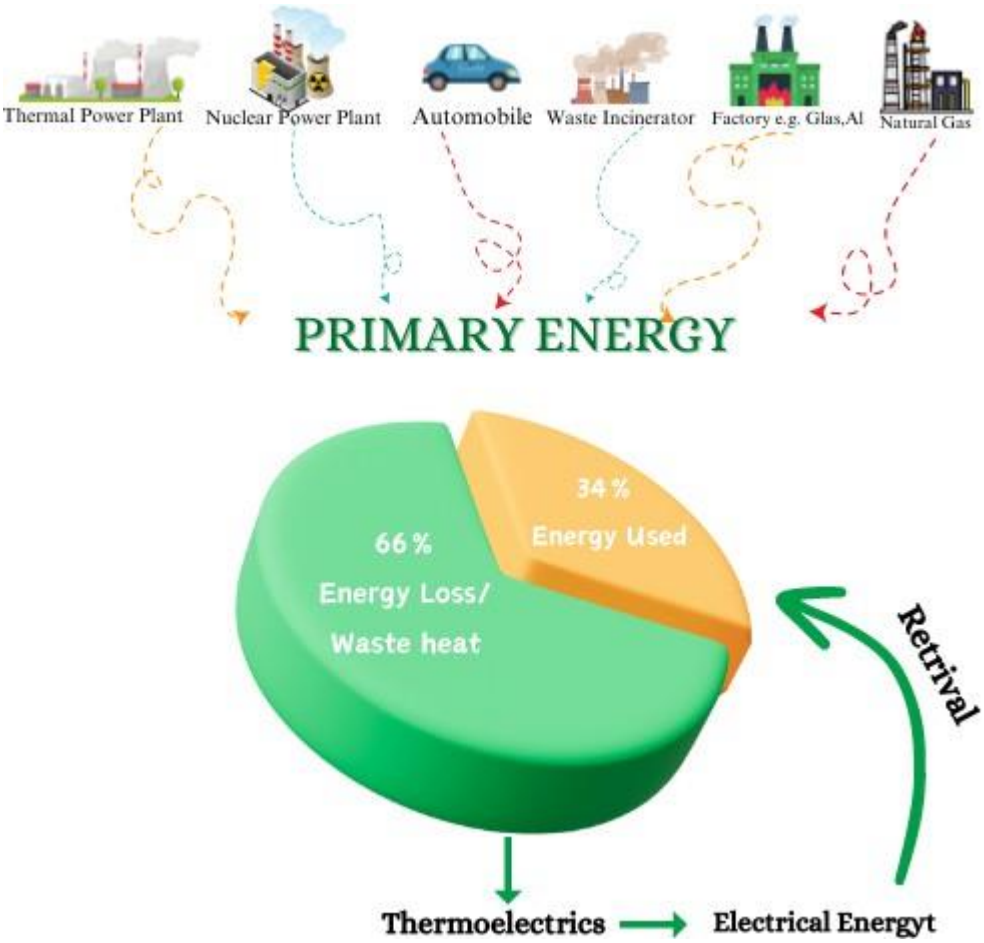

- **Purpose**

The main purpose of the project is to convert the waste energy, emitted from aircraft, by using specially designed thermoelectric devices to electricity and to increase the efficiency of aircraft.

- **Hypothesis**

If the surface of this thermal generator is exposed to waste heat emanating from the engine, and the other surface is exposed to cold air, we will convert waste heat of energy-using engines to electricity.

II. Materials and Methods

- **The list of the materials**

✓ Thermoelectric generators(width and length 40mm)
✓ Honeycomb shaped inner tube
✓ Outer tube
✓ Negative and positive wires
✓ Thermometer
✓ Dry ice
✓ Aluminium foil
✓ Alcohol lamp
✓ Voltmeter
✓ Ammeter
✓ Metal support

- **Thermoelectric generators and their working principle**

The Seebeck effect is a phenomenon in which a temperature difference between two dissimilar electrical conductors produces a voltage difference between the two substances. Thermoelectric power generators consist of three major components, including thermoelectric materials, thermoelectric modules and thermoelectric systems that interface with the heat source. Thermoelectric materials generate power directly from heat by converting temperature differences into electric voltage. A thermoelectric module is a circuit containing thermoelectric materials which generates electricity from heat directly, and thermoelectric systems generate power by taking in heat, from a source such as a hot exhaust flue. (Harpster 2007)

- **Development of thermoelectric devices**

The thermoelectric device consists of 3 main parts. The first part is the aluminium inner tube shaped as a honeycomb. Since the resistance of aluminium is low, majority of the heat of material passing through the tube will be spread to the outer side of the tube.

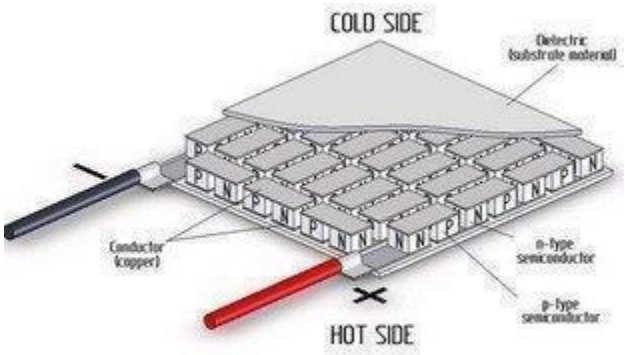

The second part consists of square thermoelectric generators with a width of 40mm. The generators placed on the surface of the tube are resistant to temperatures up to 300C. They are insulated water-resistant materials. Negative and positive wires exiting from the sides are connected into two lines.

The third part is the outer tube(surface of the aircraft engine). With the view of creating a temperature difference between the outer tube and inner tube, cold air can be run between the two pipes. As a result, one surface of the thermal generator is exposed to waste heat emanating from the inner tube, and the other surface is exposed to cold air, running from the void between the outer and inner tubes. In addition, some holes in front of the engine are designed for air entry. The produced electricity increases in line with the growth of the temperature difference.

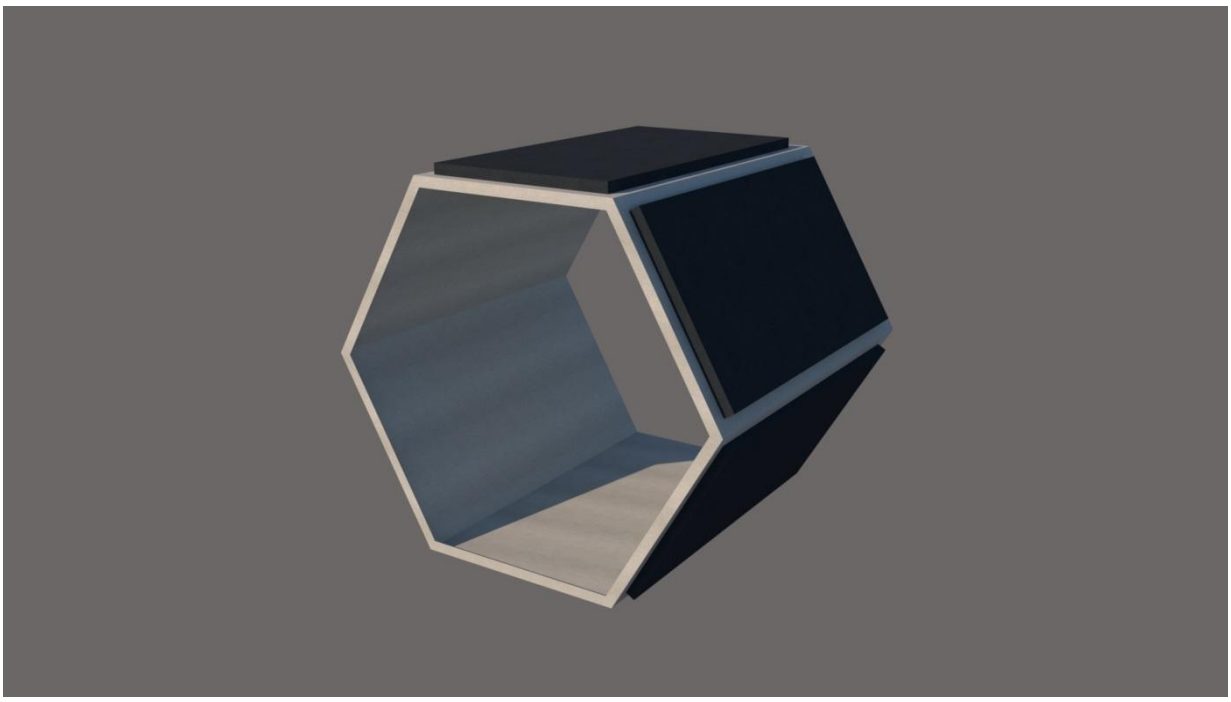

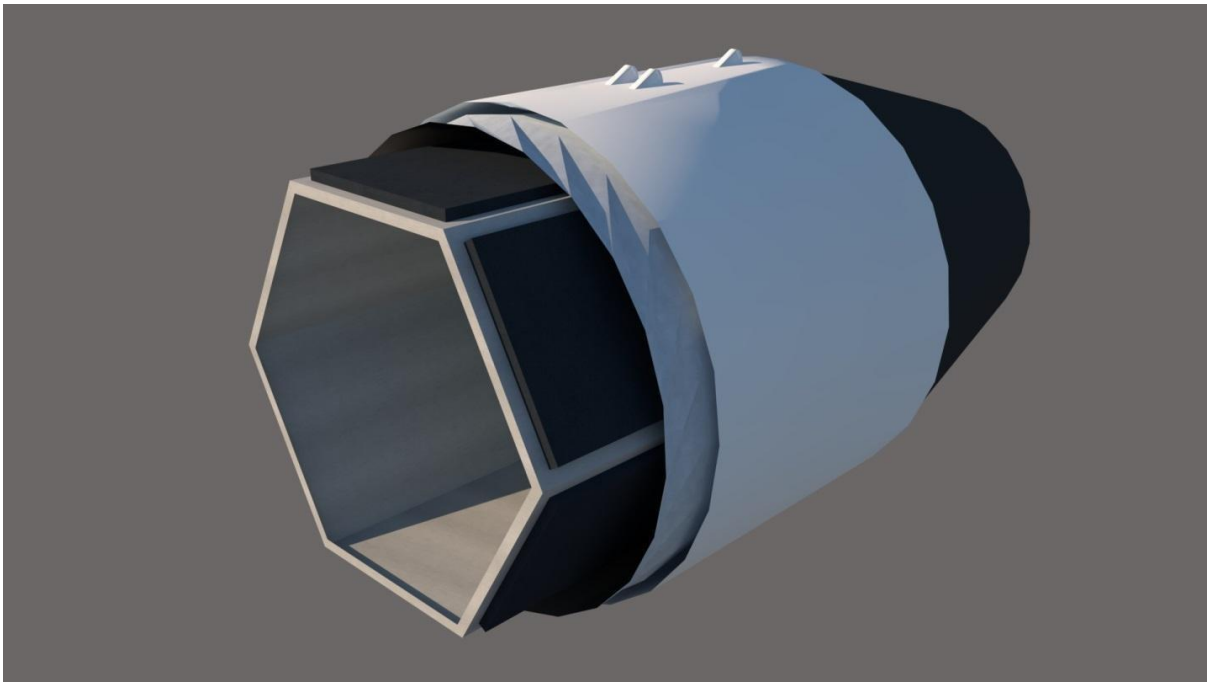

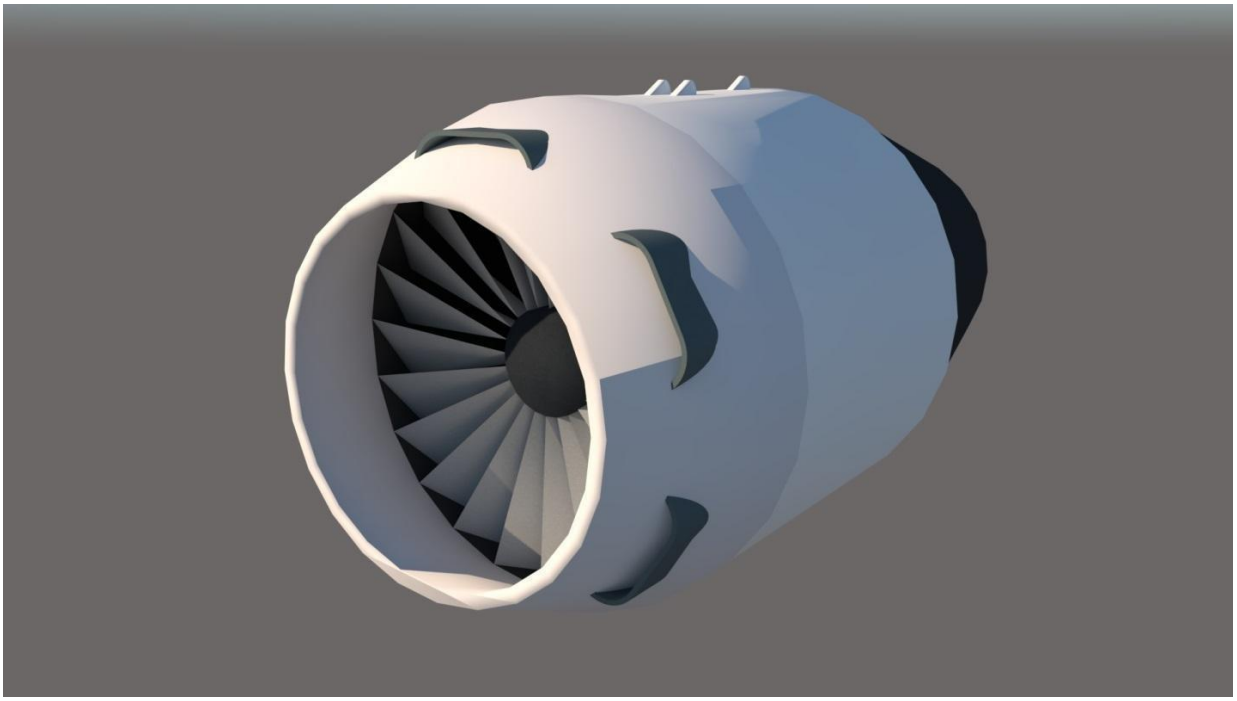

Result:

Here is the data I obtained at the end my experience:

Time	Temperature Difference	Volt	Ampere
10 sec	180°C	2,00V	0,30A
20 sec	340°C	3,40V	0,60A
30 sec	345°C	3,50V	0,65A
40 sec	350°C	3,60V	0,70A
50 sec	345°C	3,50V	0,65A
60 sec	340°C	3,40V	0,60A

When one side of the thermoelectric device was affected by dry ice at -40 degrees and the other side by a flame at 300-350 degrees, the temperature difference was enough to generate electricity. Also, 40 seconds after starting the experiment, the temperature difference started to decrease from 350 to 340 and stabilized at 340.

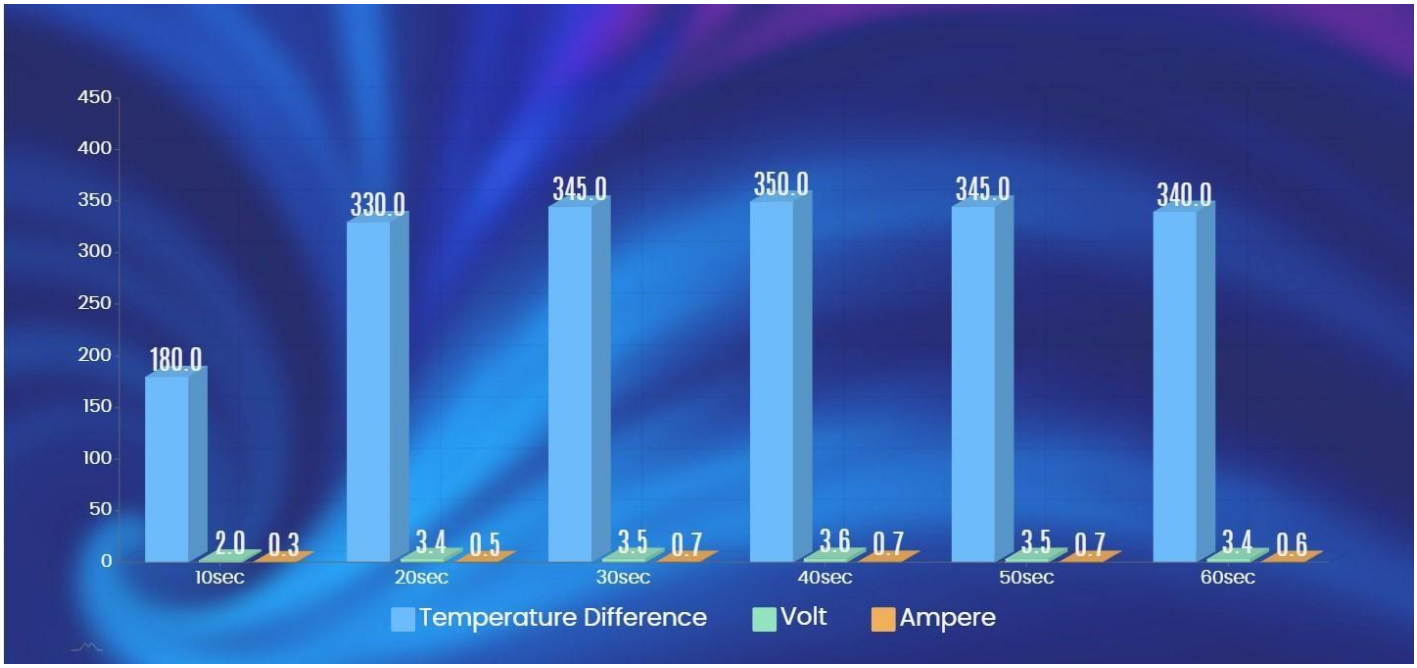

Discussion

● Suggested application area

My main proposal is to use the thermoelectric devices in planes and other aerial vehicles, as their engines discharge large amounts of waste heat, more than 660 C ,and at the high altitudes outer temperature is usually far below the zero degrees, up to -50C. Due to this massive difference, the output waste energy would be sufficient enough to increase the efficiency of the planes.

I suggest implementing the thermoelectric devices in exhaust parts of places. A lot of waste heat is released during the disposal of waste gases, produced as a result of combustion in the engine.

It's possible to acquire sufficient power from the thermoelectric devices installed in the exhaust parts of aircraft, due to the massive temperature difference in high altitudes. The temperature in the engines, during the combustion, reaches 860°C and 612°C in the exhaust. Taking into account that the temperature in the flown altitude reaches approximately -50°C, the difference in temperature amounts to 660°C. Consequently, the acquired electricity would be higher.

● Other application areas

The application areas of the thermoelectric devices are very extensive. It's possible to install the thermoelectric devices in the exhaust pipes of the hearths in remote villages. By using the double pipe structure depicted above, and running cold water between the outer tube and thermoelectric device, it's viable to increase the acquired power. Application of thermoelectric devices in exhaust furnaces of boiler rooms can also produce electricity and substantially increase the efficiency. The amount of power in these applications would not be very high, but it will contribute to power saving.

● Possible Errors

The biggest problem with the thermoelectric device is that I don't know whether it will endure the temperature of the aircraft's engine. Another problem is overloading the aircraft. If I add too many thermoelectric devices to the engine it will not be so efficient. So I should find a perfect material that will be light and persistent to temperature.

III. Conclusion

My experiment proved that my hypothesis is correct and that I can generate electricity from the thermoelectric device. I used a 4sm x 4sm thermoelectric generator in this experiment but it may vary due to location and function. Based on this, I can say the usage areas of these devices are wide and they can be easily adapted to any place. The people who set off from my project will do some research in the future such as on how I can improve the temperature resistance of thermoelectric devices or how I can make these devices lighter. As a result, If those devices improve in the future by other projects, it will lead to a huge efficiency in a lot of things.

References

[1] Сивухин Д. В., Электричество, М.: Физматлит, 2004.

[2] DiSalvo, F. J. (1999). Thermoelectric Cooling and Power Generation. Science, 703-706.

[3] Ramazan GÜZELGÖK, S. Ç. (2009). Model Bir Jet Motorunun Yapımı ve Test Edilmesi. Politeknik Dergisi, 29-33.

[4] Иноземцев А.А., Нихамкин М.А., Сандрацкий В.Л., Пятитомный учебник «Основы конструирования авиационных двигателей и энергетических установок», серия «Газотурбинные двигатели». М.: Машиностроение, 2008.

[5] Technology, C. İ. (2017, 12 2). Brief History of Thermoelectrics.

[6] Bethel Afework, Jordan Hanania, Kailyn Stenhouse, Jason Donev. *Energy Educaton.* May 18, 2018. https://energyeducation.ca/encyclopedia/Waste_heat

[7] Harpster, Joseph W. *Thermoelectric Power Generator.* March 1, 2007. https://www.britannica.com/technology/thermoelectric-power-generator

[8] Zeiss, Geoff. *Energy Efficiency of Fossil Fuel Power Generation.* January 31, 2010. https://geospatial.blogs.com/geospatial/2010/01/energy-efficiency-of-fossil-fuel-power-generation.html

AUTHORS

First Author – Inji Aliyeva-Kaspi Lyceum,10th grade Phone number-+994 50 396 91 62